NeTIRail

Needs Tailored Interoperable Railway

D2.10 Cost effective transition zone design tailored to line type and traffic

Consortium Meeting, Ljubljana – 24th May 2018

Dr. Rahi Rahbari

The University Of Sheffield.

Two different FEMs

Finite Element Models are being developed using ANSYS and LS-DYNA software. First models is combination of 3D and 2D elements (Solids and Shells) which gave the opportunity to do high detailed stress analysis of different sections, Second model is made of 2D elements (Shells and Beams) which made it much faster than the first model and gave the opportunity to model 10 coaches (40 wheels), 550m of track (combining a rigid and flexible), 100 Sleepers and 2.5m deep soil plate (with 2m thickness).

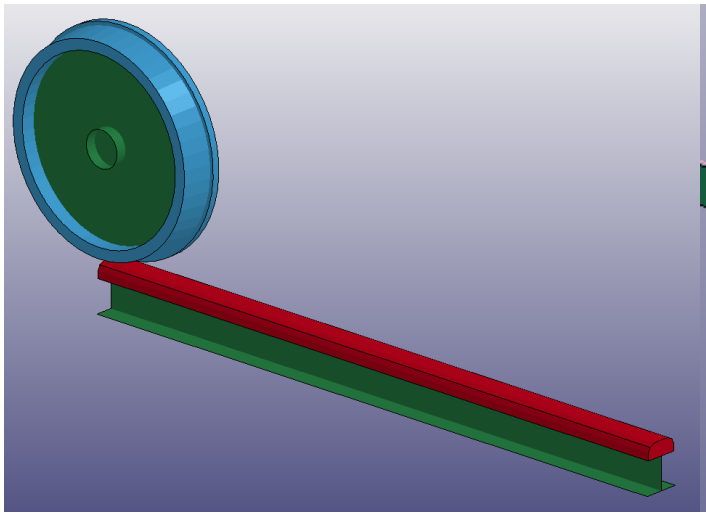

3D & 2D element model

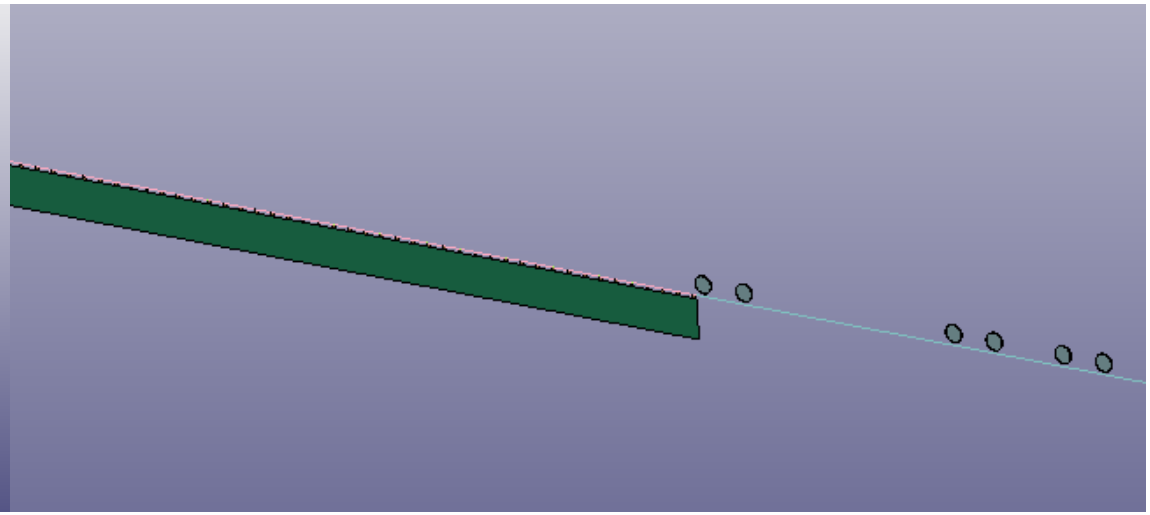

2D element model

The shell – beam model

This video shows the displacement of the soil under the track in the 2D model. Each wheel carry 5ton of vertical load and has 35m/s velocity. This model is still under development and needs verification and validation with real life measurements.

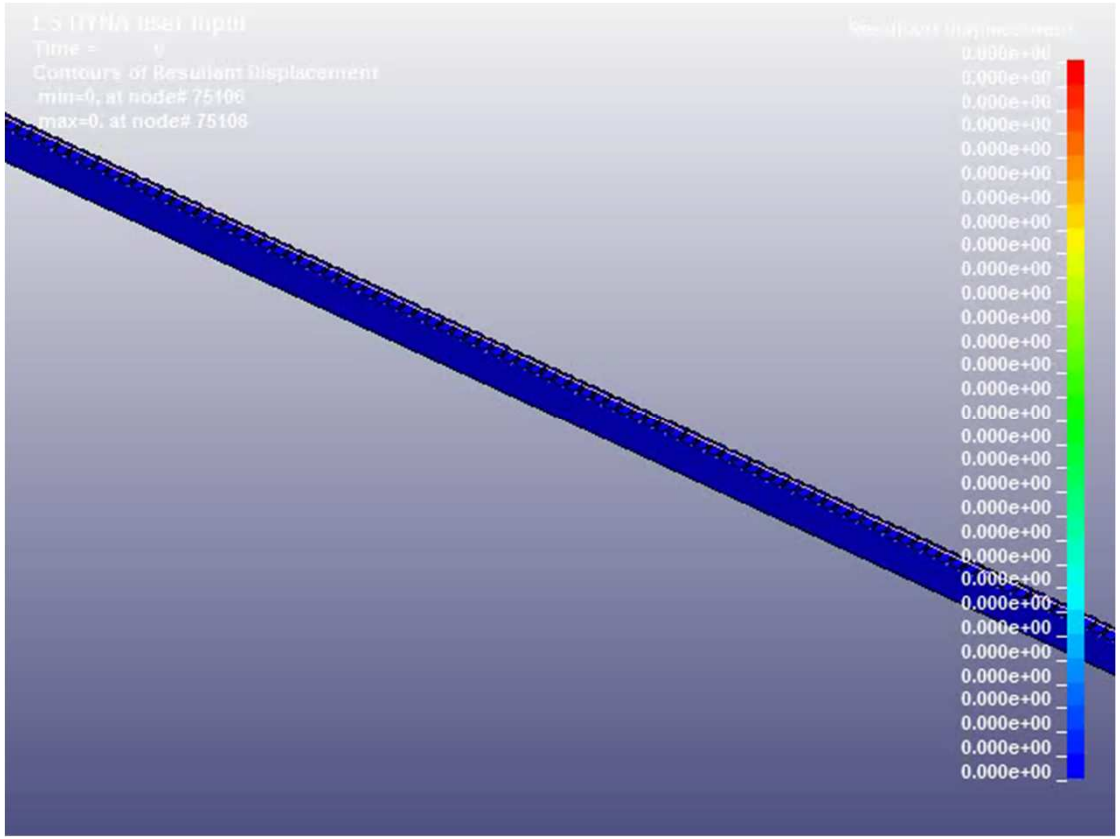

Real life measurements

Validation

Design and construction of backfills for railway track transition zones

(a) (b)

Fig. 1. Side view of the transition zone before construction (a) and general view of the track (b).

Paixao A. et al. Design and construction of backfills for railway track transition zones

Real life measurements

unbound granular material (UGM) and cement-bound granular mixtures (CBGM)

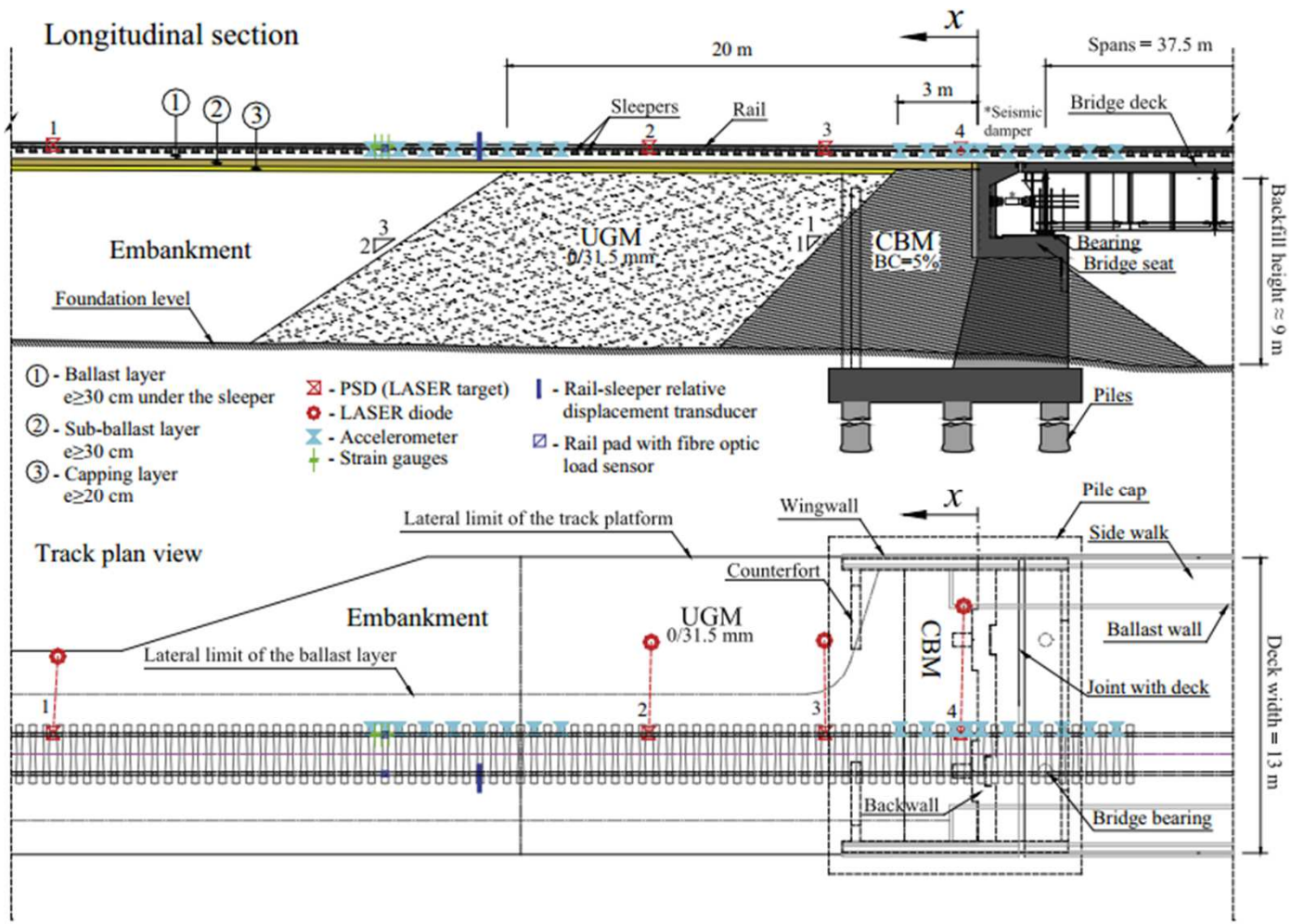

Fig. 2. Schematic longitudinal profile and plan view of the transition zone.

Real life measurements

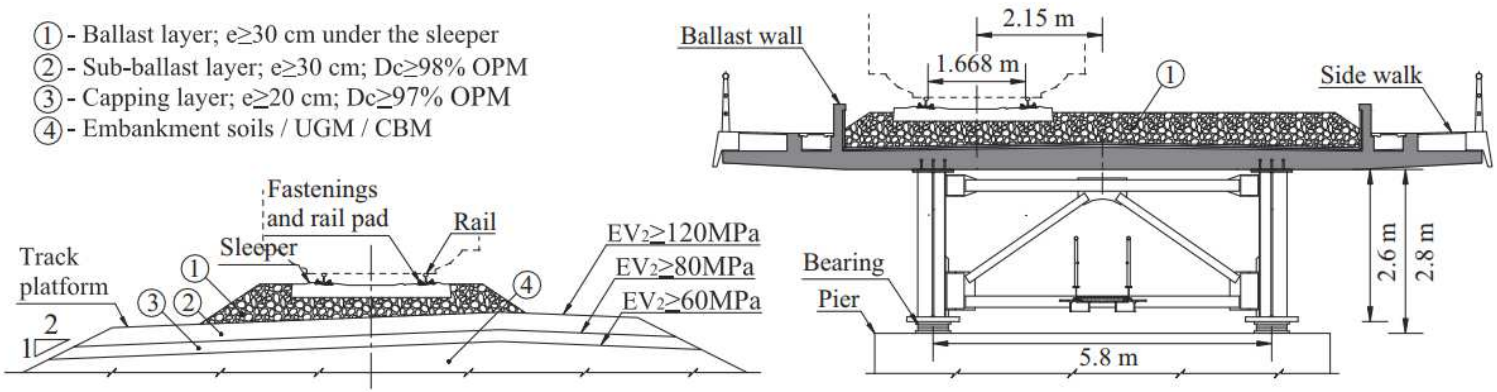

Fig. 3. Track cross sections on earthworks and on the bridge.

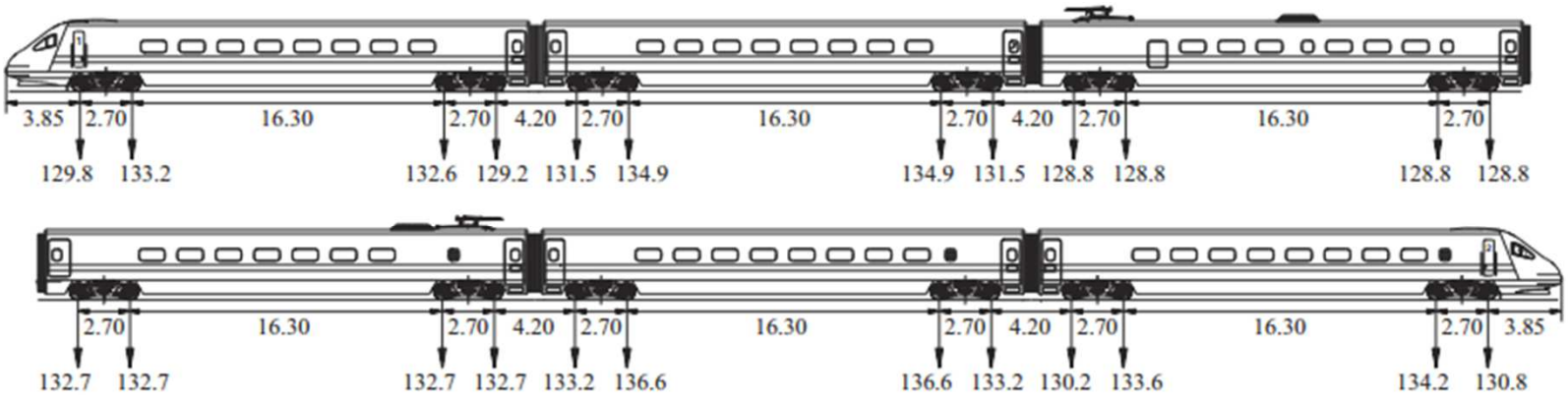

Fig. 4. Train configuration: distances between axles (in m) and approximate loads (in kN).

Model based on measurements

Updated model to present the transition zone in the paper

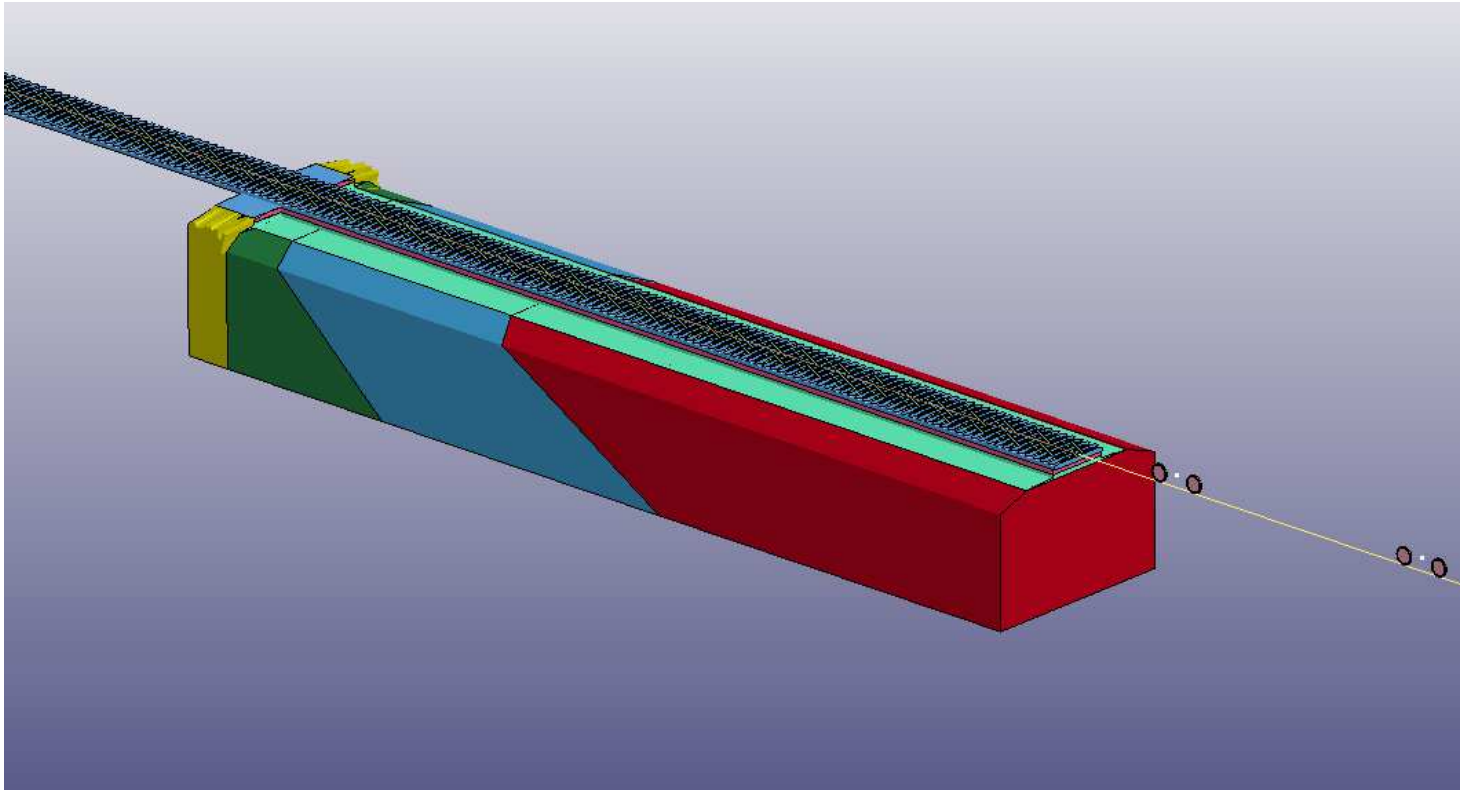

Validation

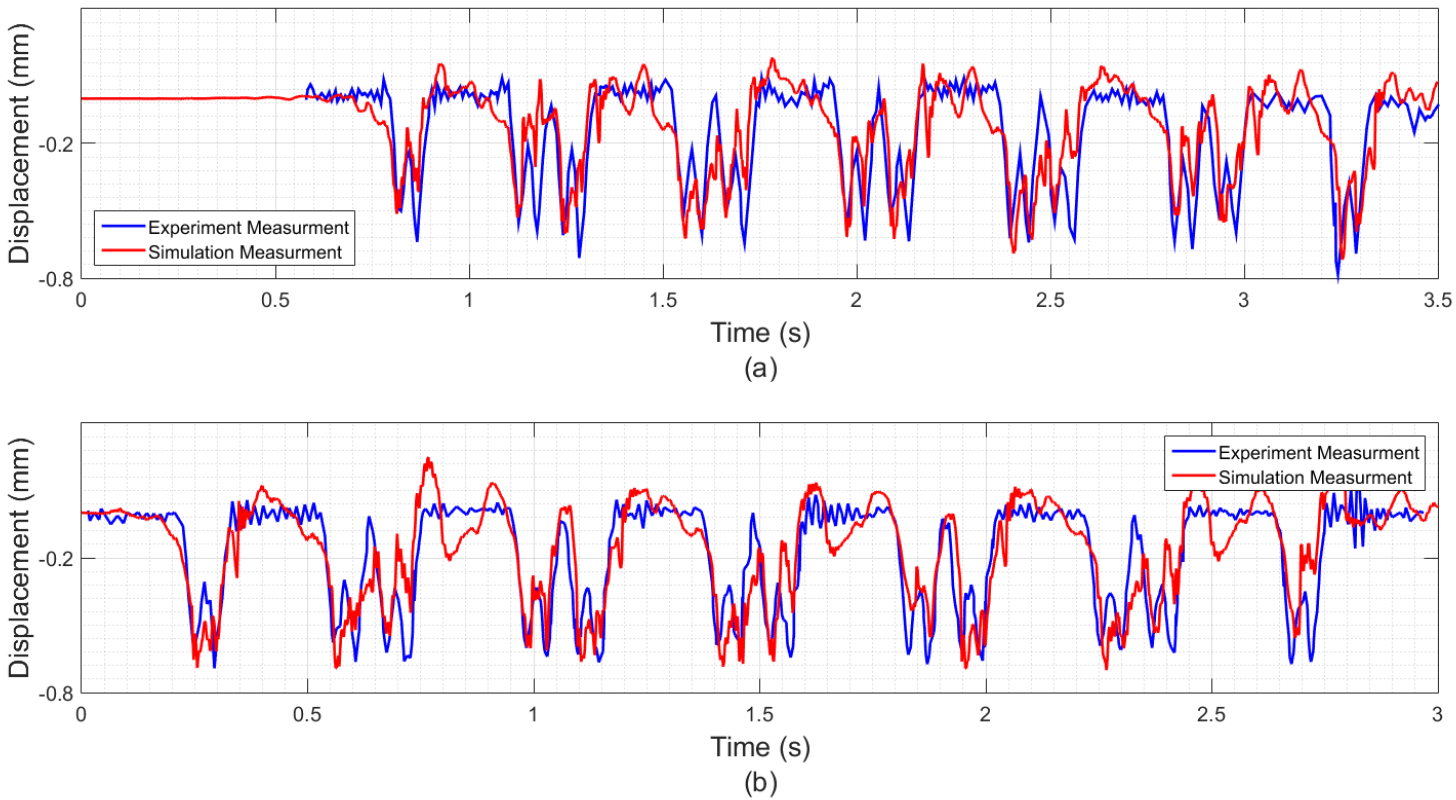

Vertical displacement of the tract at (a) 14.7m (b) 41m away from the bridge abutment

Effect of traditional TZ

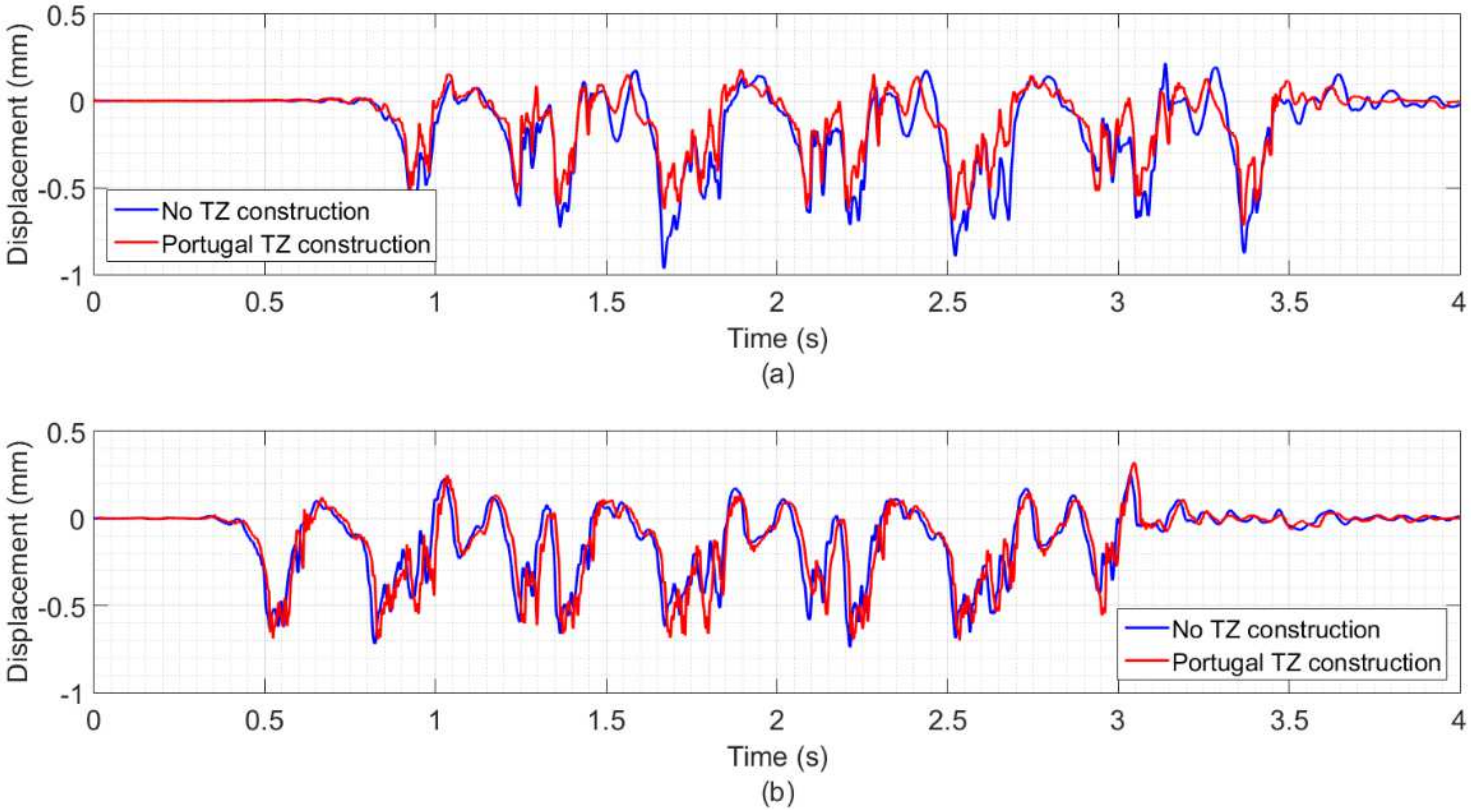

the effect of Portugal transition zone design at (a) 14.7m and (b) 41m from the bridge

Effect of new TZ

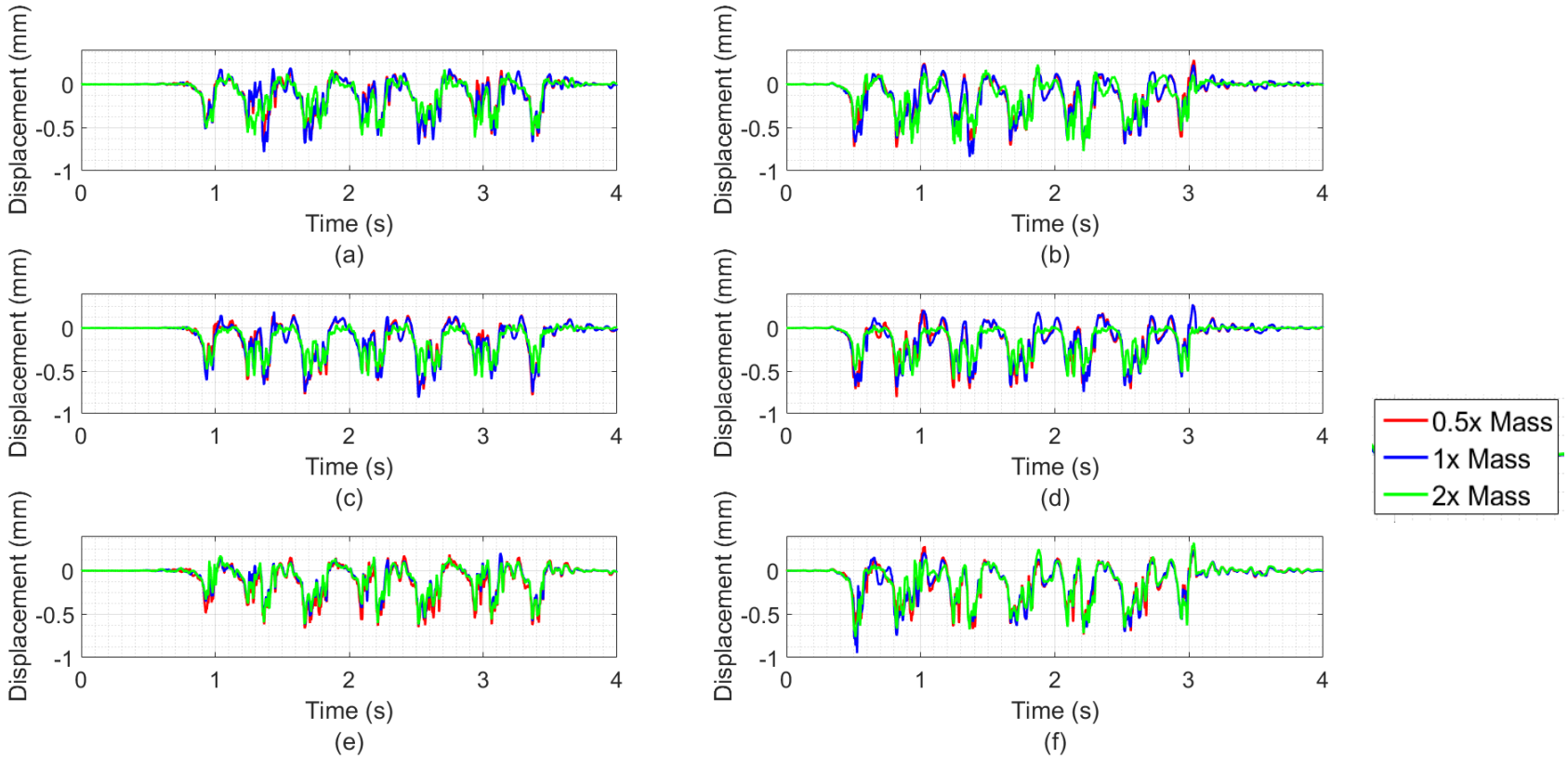

displacement time history of the track with different sleeper's mass (a) Portuguese transition zone at 14.7m from the bridge (b) Portuguese transition zone at 41m from the bridge (c) Second study of transition zone at 14.7m from the bridge (d) Second study of transition zone at 41m from the bridge (e) Third study of transition zone at 14.7m from the bridge (f) Third study of transition zone at 41m from the bridge

Effect of new TZ

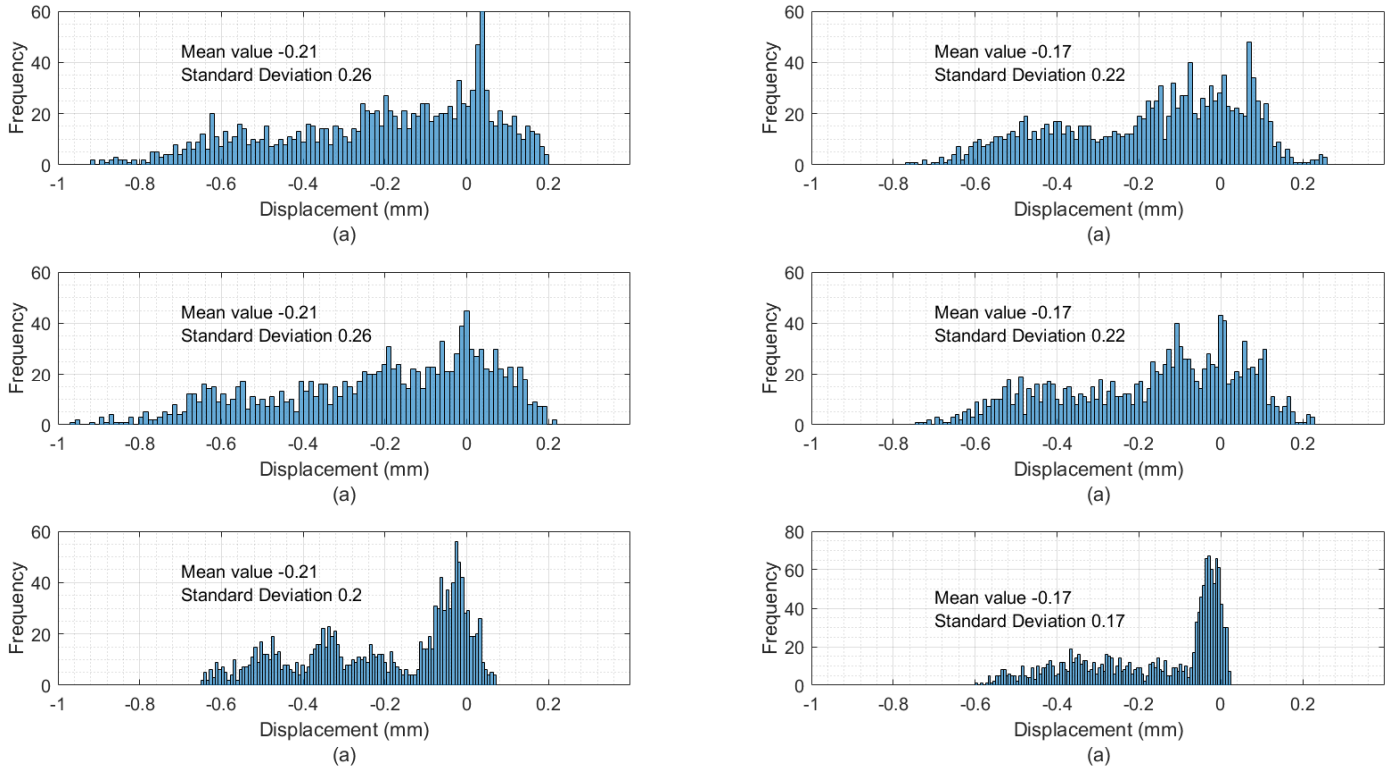

histogram of track displacement data, third study transition zone, (a) 0.5x sleeper mass, 14.7m from the bridge (b) 0.5x sleeper mass, 41m from the bridge (c) 1x sleeper mass, 14.7m from the bridge (d) 1x sleeper mass, 41m from the bridge (e) 2x sleeper mass, 14.7m from the bridge (f) 2x sleeper mass, 41m from the bridge

Q & A